computar

M1214-VSW

f=12mm F1.4 ViSWIR Lite
for Visible+SWIR image sensor, Fixed-focal
C-Mount

Model No.		M1214-VSW		Effective Lens Aperture	Front	φ21.0mm	
Focal Length		12mm			Rear	φ13.0mm	
Max. Aperture Ratio		1:1.4		Distortion	2/3type	-0.1%(y=5.5)	
Max. Image Format		8.8mm x 6.6mm(φ11mm)			1/2type	-0.35%(y=4.0)	
Transmittance Wavelength Range		400nm - 1700nm		Back Focal Length		13.1mm	
Operation Range	Iris	F1.4 - F16C		Flange Back Length		17.526mm	
	Focus	0.15m - Inf.		Mount		C-Mount	
Control	Iris	Manual		Filter Size		M30.5 P=0.5mm	
	Focus	Manual		Dimensions		φ33.5mm x 28.2mm	
Operating Temperature		-10℃ - +50℃		Weight		61.9g	
Angle of View	D	IMX990	37.8°	IMX991	19.4°	2/3 type	49.2°
	H	6.40mm x 5.12mm	30.0°	3.20mm x 2.56mm	15.2°		40.4°
	V	(φ8.20mm)	24.1°	(φ4.10mm)	12.2°		30.8°
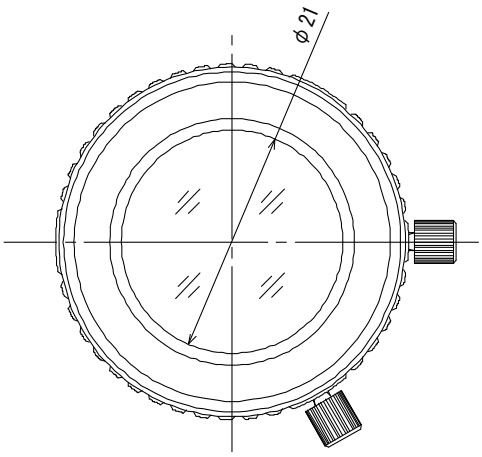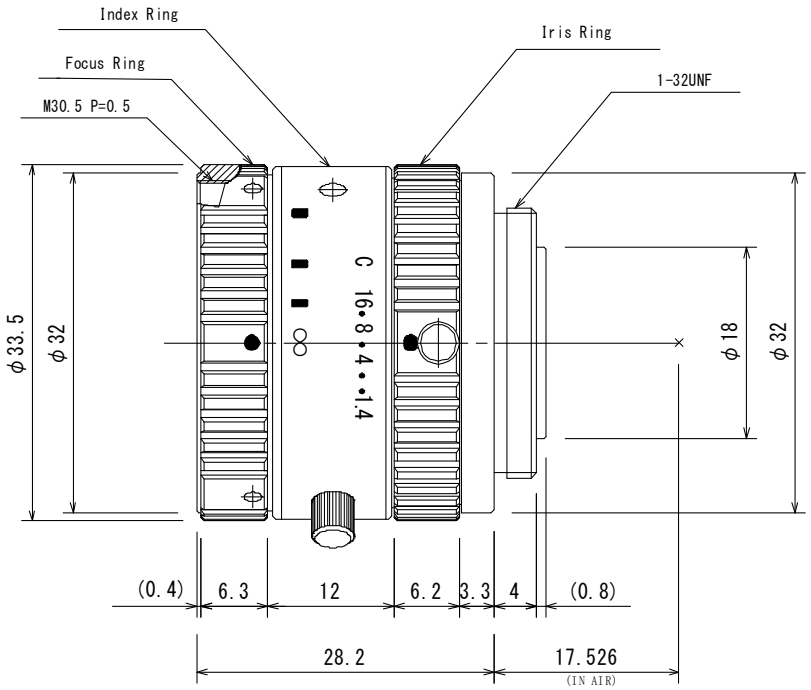
Dimensions